ACCESS SERVICES TARIFF

NEUTRAL TANDEM-PUERTO RICO, LLC

This Tariff contains the descriptions, regulations, and rates applicable to the provision of intrastate access services provided by Neutral Tandem-Puerto Rico, LLC ("Company"). Copies may be inspected during normal business hours at the Company's principal place of business at 1 South Wacker Drive, Suite 200, Chicago, IL 60606.

TABLE OF CONTENTS

Table of Contents	1
Concurring, Connecting and Other Participating Carriers	2
Explanations of Revision Marks	2
Check Sheet	3
Tariff Format	4
Application of Tariff	5
Applicability of Regulations	5
Section 1 - Definitions	6
Section 2 - General Regulations	14
Section 3 - Service Descriptions	46
Section 4 - Rates and Charges	63
Section 5 - Special Arrangements	70

CONCURRING CARRIERS
No Concurring Carriers

CONNECTING CARRIERS
No Connecting Carriers

OTHER PARTICIPATING CARRIERS
No Other Participating Carriers

EXPLANATION OF REVISION MARKS

The following symbols shall be used in this tariff for the purpose indicated below:

(C) Indicates Changed Regulation

(D) Indicates Discontinued Rate or Regulation

(I) Indicates Rate Increase

(M) Indicates Move in Location of Text

(N) Indicates New Rate or Regulation

(R) Indicates Rate Reduction

(T) Indicates Change of Text Only

CHECK SHEET

The pages listed below of this tariff are effective as of the date shown. Revised pages contain all changes from the original tariff that are in effect as of the date indicated.

PAGE	REVISION		PAGE	REVISION		PAGE	REVISION	
Title	Original		27	Original		54	Original	
1	Original		28	Original		55	Original	
2	Original		29	Original		56	Original	
3	2nd Revised	*	30	Original		57	Original	
4	Original		31	Original		58	Original	
5	Original		32	Original		59	Original	
6	Original		33	Original		60	Original	
7	Original		34	Original		61	Original	
8	Original		35	Original		62	Original	
9	Original		36	Original		63	Original	
10	Original		37	Original		64	2nd Revised	*
11	Original		38	Original		65	2nd Revised	*
12	Original		39	Original		66	2nd Revised	*
13	Original		40	Original		67	Original	
14	Original		41	Original		68	Original	
15	Original		42	Original		69	Original	
16	Original		43	Original		70	Original	
17	Original		44	Original		71	Original	
18	Original		45	Original		72	Original	
19	Original		46	Original		73	Original	
20	Original		47	Original				
21	Original		48	Original				
22	Original		49	Original				
23	Original		50	Original				
24	Original		51	1st Revised	*			
25	Original		52	Original				
26	Original		53	Original				

* - indicates those pages included with this filing

TARIFF FORMAT

A. Sheet Numbering - Sheet numbers appear in the upper right corner of the sheet. Sheets are numbered sequentially. However, new sheets are occasionally added to the Tariff. When a new sheet is added between sheets already in effect, a decimal is added. For example, a new sheet added between sheets 14 and 15 would be 14.1.

B. Sheet Revision Numbers - Revision numbers also appear in the upper right corner of each sheet. These numbers are used to determine the most current sheet version on file. For example, the 4th revised Sheet 14 cancels the 3rd revised Sheet 14. Consult the Check Sheet for the sheet currently in effect.

C. Paragraph Numbering Sequence - There are seven levels of paragraph coding. Each level of coding is subservient to the next higher level:

2.
2.1
2.1.1
2.1.1(A)
2.1.1(A)(1)
2.1.1(A)(1)(a)
2.1.1(A)(1)(a)(1)

D. Check Sheets - When a Tariff sheet is revised, an updated Check Sheet accompanies the Tariff. The Check Sheet lists the sheets contained in the Tariff, with a cross-reference to the current revision number. When new sheets are added, the Check Sheet is changed to reflect the revision. All revisions made in a given filing are designated by an asterisk (*). There will be no other symbols used on this sheet if these are the only changes made to it (i.e., the format, etc. remain the same, just revised revision levels on some sheets.) The Tariff user should refer to the latest Check Sheet to find out if a particular sheet is the most current on file.

APPLICATION OF TARIFF

This tariff sets forth the service offerings, rates, terms and conditions applicable to intrastate communications services provided by Neutral Tandem-Puerto Rico, LLC (Telephone Company). Copies may be inspected, during normal business hours, at the Company's principal place of business, 1 South Wacker, Suite 200, Chicago, IL 60606.

APPLICABILITY OF REGULATIONS

The following Regulations are applicable to all of the Telephone Company's services, unless expressly noted otherwise.

SECTION 1 - DEFINITIONS

Certain terms used herein are defined as follows:

Access or Access Service - transmission or switching services to carriers for the purpose of the origination or termination of telephone Toll Service and does not include 911, 411, 976, 311, 611, 500, 950, Directory Assistance, 0+ local, and 0+ operator services.

Access Tandem - a Telephone Company switching system that provides a distribution function for Access Service traffic between Telecommunications Carriers.

Act - means the Communications Act of 1934 [47 U.S.C. 153(R)], as amended by the Telecommunications Act of 1996, Public Law 104-104, 110 State. 56 (1996) codified throughout 47 U.S.C., and as interpreted by Applicable Law

Alternate Access Tandem - an access tandem owned by a party other than the Telephone Company.

Alternate Transit Tandem – a transit tandem owned by a party other than the Telephone Company

Answer/Disconnect Supervision - the transmission of the switch trunk equipment supervisory signal (off-hook or on-hook) to the customer's point of termination as an indication that the called party has answered or disconnected.

Automatic Number Identification (ANI) – a multi-frequency signaling Common Switching Optional Feature that provides the automatic transmission of a seven or ten digit number and information digits to the customer's premises for call originating in the LATA, to identify the calling station.

Bit - the smallest unit of information in the binary system of notation.

SECTION 1 – DEFINITIONS, (CONT'D.)

Board - Refers to the Puerto Rico Telecommunications Regulatory Board, unless otherwise indicated.

Busy Hour Minutes of Capacity (BHMC) - the customer specified maximum amount of Access Service and/or Transit Service minutes the customer expects to be handled in a designated switch during any hour in an 8:00 A.M. to 11:00 P.M. period for the service ordered. This customer furnished BHMC quantity is the input data the Telephone Company uses to determine the number of transmission paths for the service ordered.

Call – an end user attempt for which the complete address code (e.g., 10 digits) is provided to the serving dial tone office.

Call Classification – Call Classification is the classification of traffic as Access Service or as Transit Service.

Calling Party Number (CPN) - means a Signaling System 7 "SS7" parameter whereby the ten (10) digit number of the calling Party is forwarded from the End Office.

Carrier or Telecommunications Carrier - any individual, partnership, association, joint-stock company, trust, governmental entity or corporation engaged for hire in communication by wire or radio; provided that where the defined term "Non-Carrier" is used in this tariff, the entity will not be considered a Telecommunications Carrier.

Carrier Identification Code - a numeric code currently used for routing traffic and billing purposes.

Central Office - a Telephone Company switching center.

Central Office Code - the first three digits (NXX) of the seven-digit telephone number assigned to an end user's telephone exchange service.

Channel(s) - an electrical or photonic, in the case of fiber optic-based transmission systems, communications path between two or more points of termination.

Common Channel Signaling Network - a digital data network carrying signaling, routing, and control information which interfaces with the voice/data network.

SECTION 1 – DEFINITIONS, (CONT'D.)

Company – see "Telephone Company".

Constructive Order - Delivery or acceptance of calls over Company-switched local exchange services constitutes a Constructive Order by the Customer to purchase switched access services as described herein. Similarly, the selection of the Customer as the presubscribed IXC by any End user constitutes a Constructive Order of switched access by the Customer.

Customer(s) - any individual, partnership, association, joint-stock company, trust, corporation, or governmental entity or any other entity which subscribes to the services offered under this tariff.

Dedicated Transport – Direct-trunked transport provided between the customer's facility and a Telephone Company facility, hub, or tandem.

End Office Switch – a Carrier local switching system, wireless or wireline, where Customer traffic is switched for purposes of interconnection to End User(s).

End User - any customer of a telecommunications service that is not a carrier.

Entrance Facility - A Transport facility that provides dedicated transport from the customer's point of termination to the Telephone Company's facility.

Exchange - a unit generally smaller than a LATA, established by the incumbent local service provider for the administration of communications service in a specified area which usually embraces a city, town or village and its environs. It consists of one or more central offices together with the associated facilities used in furnishing communications service within that area.

SECTION 1 – DEFINITIONS, (CONT'D.)

Grandfathered - Services ordered under the provisions of this tariff and which are considered grandfathered and no longer available to new customers.

Host Office - an electronic switching system which provides call processing capabilities for one or more Remote Switching Modules or Remote Switching Systems.

Immediately Available Funds - a corporate or personal check drawn on a bank account and funds which are available for use by the receiving party on the same day on which they are received and include U.S. Federal Reserve bank wire transfers, U.S. Federal Reserve notes (paper cash), U.S. coins, and U.S. Postal Money Orders.

Individual Case Basis (ICB) - a condition in which the regulations, rates and charges for an offering under the provisions of this tariff are developed based on the circumstances in each case.

Interconnected Carrier (IC) or Interconnected Telecommunications Carrier – A Carrier or Telecommunications Carrier connected to the Telephone Company.

InterMTA Traffic - InterMTA traffic refers to wireless traffic that originates and terminates in two different MTAs.

Interstate Communications - both interstate and foreign communications.

Interexchange Carrier (IXC) – Toll Service provider.

IntraMTA Traffic - IntraMTA traffic refers wireless-to-wireline traffic that originates and terminates within the same MTA.

Intrastate Communications - any communications within a state subject to oversight by a state regulatory commission as provided by the laws of the state involved. Intrastate communication can be intraLATA or InterLATA in nature, with intraLATA calls being between two parties located within the same LATA and intrastate, interLATA calls being between two users in different LATAs in the state.

Local Exchange Routing Guide (LERG) - is the industry reporting tool used to provision the appropriate NPA NXXs in networks.

SECTION 1 – DEFINITIONS, (CONT'D.)

Local Calling Area - a geographical area, as defined in the incumbent telephone company's local exchange service tariff, in which an end user may complete a call without incurring Toll charges.

Local Access and Transport Area (LATA) - a geographic area established for the provision and administration of communications service. It encompasses one or more designated exchanges, which are grouped to serve common social, economic and other purposes.

Line Information Data Base (LIDB) - a transaction-oriented database system that functions as a centralized repository for data storage and retrieval. LIDB contains records associated with End User line numbers and special billing numbers. LIDB accepts queries from other network elements and provides return result, return error, and return reject responses as appropriate. Examples of information that stored in LIDB and in its Line Records are: ABS validation data, originating line number screening (OLNS) data, ZIP Code data, and calling name information.

Line Record - means information in LIDB and/or the LIDB administrative system that is specific to a single telephone number or billing number.

Line-Side Connection - a connection of a transmission path to the line side of a local exchange switching system.

Major Fraction Thereof - is any period of time in excess of 1/2 of the stated amount of time. As an example, in considering a period of one hour, a major fraction of one hour would be 31 minutes. Therefore, if a given service is interrupted for one hour and 31 minutes, the customer would be given a credit for two hours. For one hour and 30 minutes or less, the customer would be given credit for one hour.

Meet-Point Billing (MPB) - refers to the billing associated with interconnection of facilities between two or more carriers for the routing of traffic to and from an interexchange carrier with which one or more of the carriers does not have a direct connection. In a multi-bill environment, each local carrier bills the appropriate tariffed rate for its portion of a jointly provided Access Service.

SECTION 1 – DEFINITIONS, (CONT'D.)

Message - a "Call" as defined preceding.

Minutes of Use (MOUs) – the number of minutes for which a customer is billed in relation to any usage-sensitive service element provided by the Telephone Company

Mixed Access and Transit Service – Both Transit and Access Services provided over a single facility.

Mobile Switching Center (MSC) - is the location of the switch in a cellular telephone network used by a Commercial Mobile Radio Services (CMRS) provider in performing, *inter alia,* terminating and originating functions for calls to and from a CMRS provider's end user.

MTA - Major Trading Area as defined in 47 C.F.R. paragraph 24-102 of the FCC Rules and Regulations.

Network Interface - the point of interconnection between Telephone Company communications facilities and terminal equipment, protective apparatus or wiring at a customer's premises or point of interconnection. The network interface or demarcation point shall be located on the subscriber's side of the telephone company's protector, or the equivalent thereof in cases where a protector is not employed, as provided under the Telephone Company's reasonable and nondiscriminatory standard operating practices.

Non-Authorized Traffic - traffic that is not defined as Transit or Access traffic, including 911, 411, 976, 311, 611, 500, 950, Directory Assistance, 0+ local, and 0+ operator services.

Non-Carrier - any individual, partnership, association, joint-stock company, trust, governmental entity or corporation which has not been explicitly classified as a Telecommunications Carrier by the Federal Communications Commission.

North American Numbering Plan (NANP) - a three-digit area (Numbering Plan Area) code and a seven-digit telephone number made up of a three-digit Central Office code plus a four-digit station number.

Off-hook - the active condition of a Switched Access or Transit Service connection.

On-hook - the idle condition of a Switched Access or Transit Service connection.

SECTION 1 – DEFINITIONS, (CONT'D.)

Operating Company Number (OCN) – a four place alphanumeric code (NNXX), assigned by NECA, that identifies providers of telecommunications services. A separate code is required for each state in which a company provides facility based telecommunication services.

Originating Carrier – The carrier originating a call from an End User.

Originating Direction - the origination of calls from an End User premises.

Originating Point Code - a field within a signaling message that identifies the originating network signaling node.

Other ILEC Areas –designates the rates applicable for areas served by ILECs not specifically named in this tariff.

Percentage of Intrastate IntraLATA Use (PIIU) – Intrastate intraLATA versus intrastate interLATA jurisdictional use of a service as reported by the customer. This percentage is stated as a whole number percentage which is the customer's best estimate of the percentage of the total use of the intrastate service that will be intrastate intraLATA in nature.

Percentage for Interstate Use (PIU) - Interstate jurisdictional use of a service as reported by the customer. This percentage is stated as a whole number percentage which is the customer's best estimate of the percentage of the total use of the service that will be interstate in nature.

Point of Termination - the point of demarcation within a customer-designated premises or point of interconnection at which the Telephone Company's responsibility for the provision of service ends.

Premises - a building, a portion of a building in a multi-tenant building or buildings on continuous property not separated by a public thoroughfare.

SECTION 1 – DEFINITIONS, (CONT'D.)

Service Code - an SS7 parameter that allows individual calls to be identified and routed based on specific service characteristics.

Service Interface - is that point of termination where all tariffed technical/physical parameters are defined. The Service Interface is located at the Network Interface or may be extended at the customer's request.

Signaling System Seven (SS7) - the layered protocol used for standardized Common Channel Signaling in the United States.

Telephone Company – Neutral Tandem-Puerto Rico, LLC

Toll Service or Long Distance - is as defined in the Act.

Terminating Carrier – The carrier terminating a call to an End User.

Terminating Direction - the completion of calls to an End User premises.

Transit or Transit Service – Transit Service means all Section 251 (b)(5) Traffic, ISP-Bound Traffic, IntraLATA Toll Traffic (not delivered to an IXC), and/or CMRS IntraMTA Traffic. A Transit rate element applies to all MOUs transited over the Telephone Company network. The originating Interconnected Carrier is responsible for payment of the appropriate rates unless otherwise specified. Transit Service does not include 911, 411, 976, 311, 611, 500, 950, Directory Assistance, 0+ local, and 0+ operator services.

Transit Tandem - a Telephone Company switching system that provides a distribution function for Transit Service traffic between Telecommunications Carriers.

Trunk - a communications path connecting two switching systems in a network, used in the establishment of an end-to-end connection.

Trunk Group - a set of trunks which are traffic engineered as a unit for the establishment of connections between switching systems in which all of the communications paths are interchangeable.

Trunk Side Connection - the connection of a transmission path to the trunk side of a local exchange switching system.

V and H Coordinates Method - a method of computing airline miles between two points by utilizing an established formula which is based on the vertical and horizontal coordinates of the two points.

SECTION 2 - GENERAL REGULATIONS

2.1 Undertaking of the Telephone Company

2.1.1 Scope

(A) The Telephone Company does not undertake to transmit messages under this tariff.

(B) The Telephone Company shall be responsible only for the installation, operation and maintenance of the services which it provides.

(C) The Telephone Company will, for maintenance purposes, test its services only to the extent necessary to detect and/or clear troubles.

(D) Services are provided 24 hours daily, seven days per week, except as set forth in other applicable sections of this tariff.

(E) The Telephone Company does not warrant that its facilities and services meet standards other than those set forth in this tariff.

2.1.2 Limitations

(A) The customer may not assign or transfer the use of services provided under this tariff; however, where there is no interruption of use or relocation of the services, such assignment or transfer may be made to:

(1) another customer, whether an individual, partnership, association or corporation, provided the assignee or transferee assumes all outstanding indebtedness for such services, and the unexpired portion of the minimum period and the termination liability, if any, applicable to such services, if any; or

SECTION 2 - GENERAL REGULATIONS, (CONT'D.)

2.1 Undertaking of the Telephone Company, (Cont'd.)

2.1.2 Limitations, (Cont'd.)

(A) (Cont'd.)

(2) a court appointed receiver, trustee or other person acting pursuant to law in bankruptcy, receivership, reorganization, insolvency, liquidation or other similar proceedings, provided the assignee or transferee assumes the unexpired portion of the minimum period and the termination liability applicable to such services, if any.

(B) In all cases of assignment or transfer, the written acknowledgment of the Telephone Company is required prior to such assignment or transfer which acknowledgment shall be made within 15 days from the receipt of notification. All regulations and conditions contained in this tariff shall apply to such assignee or transferee.

(C) The assignment or transfer of services does not relieve or discharge the assignor or transferor from remaining jointly or severally liable with the assignee or transferee for any obligations existing at the time of the assignment or transfer.

(D) The regulations for the installation and restoration of Telecommunications Service Priority (TSP) system services shall be subject to the Federal Communications Commission's Rules and Regulations.

(E) Subject to compliance with the rules mentioned in (D) preceding, the services offered herein will be provided to customers on a first-come, first-served basis.

2.1.3 Liability

(A) The Telephone Company's liability, if any, for its willful misconduct is not limited by this tariff. With respect to any other claim or suit, by a customer, or by any others, for damages associated with the installation, provision, preemption, termination, maintenance, repair or restoration of service, and subject to the provisions of (B) through (L) following, the Telephone Company's liability, if any, shall not exceed an amount equal to the proportionate charge for the service for the period during which the service was affected. This liability for damages shall be in addition to any amounts that may otherwise be due the customer under this tariff as a Credit Allowance for a Service Interruption.

SECTION 2 - GENERAL REGULATIONS, (CONT'D.)

2.1 Undertaking of the Telephone Company, (Cont'd.)

2.1.3 Liability, (Cont'd.)

(B) The Telephone Company shall not be liable for:

(1) Any act or omission of any other carrier or customer providing a portion of a service;

(2) Any intentional, wrongful act of a Telephone Company employee when such act is not within the scope of the employee's responsibilities for the Telephone Company and/or is not authorized by the Telephone Company;

(3) Any representations made by Telephone Company employees that do not comport, or that are inconsistent, with the provisions of this Tariff;

(4) Any noncompletion of calls due to network busy conditions; and

(5) Any calls not actually attempted to be completed during any period that service is unavailable.

(C) The Telephone Company is not liable for damages to the customer premises resulting from the furnishing of a service, including the installation and removal of equipment and associated wiring, unless the damage is caused by the Telephone Company's negligence.

(D) The Telephone Company shall be indemnified, defended and held harmless by the end user against any claim, loss or damage arising from the end user's use of services offered under this tariff, involving:

(1) Claims for libel, slander, invasion of privacy, or infringement of copyright arising from the end user's own communications;

(2) Claims for patent infringement arising from the end user's acts combining or using the service furnished by the Telephone Company in connection with facilities or equipment furnished by the end user or Interconnected Carrier ("IC");

(3) All other claims arising out of any act or omission of the end user in the course of using services provided pursuant to this tariff.

SECTION 2 - GENERAL REGULATIONS, (CONT'D.)

2.1 Undertaking of the Telephone Company, (Cont'd.)

2.1.3 Liability, (Cont'd.)

(E) The Telephone Company shall be indemnified, defended and held harmless by the IC against any claim, loss or damage arising from the IC's use of services offered under this tariff, involving:

(1) Claims for libel, slander, invasion of privacy, or infringement of copyright arising from the IC's own communications;

(2) Claims for patent infringement arising from the IC's acts combining or using the service furnished by the Telephone Company in connection with facilities or equipment furnished by the end user or IC or;

(3) All other claims arising out of any act or omission of the IC in the course of using services provided pursuant to this tariff.

(F) The Telephone Company does not guarantee or make any warranty with respect to its services when used in an explosive atmosphere. The Telephone Company shall be indemnified, defended and held harmless by the customer from any and all claims by any person relating to such customer's use of services so provided.

(G) No license under patents (other than the limited license to use) is granted by the Telephone Company or shall be implied or arise by estoppel, with respect to any service offered under this tariff. The Telephone Company will defend the customer against claims of patent infringement arising solely from the use by the customer of services offered under this tariff and will indemnify such customer for any damages awarded based solely on such claims.

(H) The Telephone Company's failure to provide or maintain services under this tariff shall be excused by labor difficulties, governmental orders, civil commotion, criminal actions taken against the Telephone Company, acts of God and other circumstances beyond the Telephone Company's reasonable control, subject to the Credit Allowance for a Service Interruption as set forth in 2.4.4. following.

SECTION 2 - GENERAL REGULATIONS, (CONT'D.)

2.1 Undertaking of the Telephone Company, (Cont'd.)

2.1.3 Liability, (Cont'd.)

(I) The Telephone Company assumes no responsibility for the availability or performance of any cable or satellite systems or related facilities under the control of other entities, or for other facilities provided by other entities used for service to the Customer, even if the Telephone Company has acted as the Customer's agent in arranging for such facilities or services. Such facilities are provided subject to such degree of protection or nonpreemptibility as may be provided by the other entities.

(J) Except as otherwise stated in this Tariff, any claim of whatever nature against the Telephone Company shall be deemed conclusively to have been waived unless presented in writing to the Telephone Company within thirty (30) days after the date of the occurrence that gave rise to the claim.

(K) NEITHER TELEPHONE COMPANY NOR ITS AFFILIATES, OFFICERS, DIRECTORS, EMPLOYEES, AGENTS OR ASSIGNS, SHALL BE LIABLE TO CUSTOMER OR ANY THIRD PARTY, INCLUDING THEIR OWN CUSTOMERS OR END USERS, FOR ANY SPECIAL, INCIDENTAL, PUNITIVE, CONSEQUENTIAL OR OTHER INDIRECT DAMAGES, INCLUDING, BUT NOT LIMITED TO, LOST PROFITS, LOSS OF BUSINESS OR ANY OTHER PECUNIARY LOSS, ARISING IN ANY WAY OUT OF OR UNDER THIS TARIFF OR RELATED AGREEMENT, WHETHER IN TORT, CONTRACT OR OTHERWISE, EVEN IF SUCH PARTY HAS BEEN ADVISED OF THE POSSIBILITY OF SUCH DAMAGES. CARRIER'S AND ITS SUBCONTRACTORS LIABILITY TO CUSTOMER AND ITS CUSTOMERS OR END USERS ARISING OUT OF OR UNDER THIS TARIFF OR RELATED AGREEMENT, WHETHER IN CONTRACT, TORT OR OTHERWISE, SHALL BE LIMITED TO THE AMOUNTS PAID BY CUSTOMER TO CARRIER IN THE SIX (6) MONTH PERIOD IMMEDIATELY PRECEDING THE TIME THAT THE EVENT RESULTING IN LIABILITY OCCURS.

SECTION 2 - GENERAL REGULATIONS, (CONT'D.)

2.1 Undertaking of the Telephone Company, (Cont'd.)

2.1.3 Liability, (Cont'd.)

(L) DISCLAIMER OF WARRANTIES. TELEPHONE COMPANY MAKES NO WARRANTY TO CUSTOMER, OR TO ITS OWN CUSTOMERS, END USERS, OR ANY OTHER PERSON, WHETHER EXPRESS, IMPLIED OR STATUTORY, AS TO THE MERCHANTABILITY, FITNESS FOR ANY PARTICULAR PURPOSE, LACK OF VIRUSES, ACCURACY OR COMPLETENESS OF RESPONSES OR RESULTS, TITLE, NONINFRINGEMENT, QUIET ENJOYMENT OR QUIET POSSESSION, OR CORRESPONDENCE TO DESCRIPTION WITH RESPECT TO THE SERVICES AND ANYTHING PROVIDED OR USED UNDER, OR AS A RESULT OF, THIS TARIFF OR ANY RELATED AGREEMENT.

2.1.4 Provision of Services

The Telephone Company, to the extent that such services are or can be made available with reasonable effort, will provide to the customer upon reasonable notice services offered in other applicable sections of this tariff at rates and charges specified therein.

2.1.5 Maintenance of Services

The services provided under this tariff shall be maintained by the Telephone Company. The customer or others may not rearrange, move, disconnect, remove or attempt to repair any facilities provided by the Telephone Company, other than by connection or disconnection to any interface means used, except with the written consent of the Telephone Company.

SECTION 2 - GENERAL REGULATIONS, (CONT'D.)

2.1 Undertaking of the Telephone Company, (Cont'd.)

2.1.6 Refusal and Discontinuance of Service

(A) Unless the provisions of 2.2.1(B) apply, if a customer fails to comply with the provisions of this Tariff or other requirements agreed to by the customer, including any payments to be made by it on the dates and times herein specified, the Telephone Company may, on five (5) days written notice of noncompliance, refuse additional applications for service and/or refuse to complete any pending orders for service by the non-complying customer and/or discontinue the provision of services at any time thereafter. Telephone Company reserves the right to refuse service to any carrier whose use or continued use of the Service would be materially adverse to the interest of the Telephone Company or Interconnected Carriers.

If the Telephone Company does not refuse additional applications for service on the date specified in the five (5) days notice, and the customer's noncompliance continues, nothing contained herein shall preclude the Telephone Company's right to refuse additional applications for service by the non-complying customer without further notice.

(B) If the Telephone Company discontinues service, it will no longer route any traffic that uses the customer's Carrier Identification Code (CIC), Local Routing Number (LRN), carrier owned NPA-NXX or any other element used to route traffic. In the case of such discontinuance, all applicable charges, including termination charges, if any, shall become due. If the Telephone Company does not discontinue the provision of the services involved on the date specified in the five (5) days notice, and the customer's noncompliance continues, nothing contained herein shall preclude the Telephone Company's right to discontinue the provision of the services to the non-complying customer without further notice.

SECTION 2 - GENERAL REGULATIONS, (CONT'D.)

2.1 Undertaking of the Telephone Company, (Cont'd.)

2.1.6 Refusal and Discontinuance of Service, (Cont'd.)

(C) If the Company refuses or discontinues providing service pursuant to this tariff or the Customer elects to discontinue receiving service pursuant to this tariff, in an effort to preserve uninterrupted termination of traffic and to avoid unnecessary disruptions in PSTN calling, the Customer will maintain the existing interconnections for the purpose of receiving traffic from the Company while the Company and Customer negotiate a termination agreement to govern the interconnections. The Company will be responsible for all costs associated with delivering traffic to the existing point of interconnection. These terms will continue to apply until such time as a termination agreement under which the Customer will receive traffic from the Company becomes effective. The Customer and the Company will use their best endeavors to resolve promptly and in good faith all outstanding issues in the negotiation of such an agreement, and will escalate any disputes to members of senior management. However, if the Customer and the Company are unable to come to a resolution of certain issues during the negotiation process, either the Customer or the Company may at any time request arbitration, mediation or assistance from the Board or, if applicable, the Federal Communications Commission, to resolve the remaining issues, in accordance with the applicable commission's procedures. For purposes of this provision, "providing/receiving service pursuant to this tariff" includes services that are provided under a separate written agreement that only incorporates the General Regulations section of this tariff.

SECTION 2 - GENERAL REGULATIONS, (CONT'D.)

2.1 Undertaking of the Telephone Company, (Cont'd.)

2.1.7 Notification of Service-Affecting Activities

The Telephone Company will provide the customer reasonable notification of service affecting activities that may occur in normal operation of its business. Such activities may include, but are not limited to, equipment or facilities additions, removals or rearrangements, routine preventative maintenance and major switching machine change-out. Generally, such activities are not individual customer service specific; they affect many customer services. No specific advance notification period is applicable to all service activities. The Telephone Company will work cooperatively with the customer to determine reasonable notification requirements.

2.1.8 Coordination with Respect to Network Contingencies

The Telephone Company intends to work cooperatively with the customer to develop network contingency plans in order to maintain maximum network capability following natural or man-made disasters which affect telecommunications services.

2.1.9 Emergency Blocking

Customer agrees that if the Telephone Company, in its sole discretion, determines that an emergency action is necessary to protect the Telephone Company network or business, the Telephone Company may block any transmission path over the Telephone Company network to Customer transmissions that are needed to protect the integrity of the Telephone Company network or business. Neither Party shall have any obligation to the other Party for any claim, judgment or liability resulting from such blockage.

SECTION 2 - GENERAL REGULATIONS, (CONT'D.)

2.2 Use

2.2.1 Interference or Impairment

(A) The characteristics and methods of operation of any circuits, facilities or equipment provided by other than the Telephone Company and associated with the facilities utilized to provide services under this tariff shall not interfere with or impair service over any facilities of the Telephone Company, its affiliated companies, or its connecting and concurring carriers involved in its services, cause damage to their plant, impair the privacy of any communications carried over their facilities or create hazards to the employees of any of them or the public.

(B) Except as provided for equipment or systems subject to the FCC Part 68 Rules in 47 C.F.R. Section 68.108, if such characteristics or methods of operation are not in accordance with (A) preceding, the Telephone Company will, where practicable, notify the customer that temporary discontinuance of the use of a service may be required; however, where prior notice is not practicable, nothing contained herein shall be deemed to preclude the Telephone Company's right to temporarily discontinue forthwith the use of a service if such action is reasonable under the circumstances. In case of such temporary discontinuance, the customer will be promptly notified and afforded the opportunity to correct the condition which gave rise to the temporary discontinuance. During such period of temporary discontinuance, credit allowance for service interruptions as set forth in 2.4.4 (A) and (B) following is not applicable.

2.2.2 Unlawful Use

The service provided under this tariff shall not be used for an unlawful purpose.

SECTION 2 - GENERAL REGULATIONS, (CONT'D.)

2.3 Obligations of the Customer

2.3.1 Damages

The customer shall reimburse the Telephone Company for damages to the Telephone Company facilities utilized to provide services under this tariff caused by the negligence or willful act of the customer or resulting from the customer's improper use of the Telephone Company facilities, or due to malfunction of any facilities or equipment provided by other than the Telephone Company. The Telephone Company will, upon reimbursement for damages, cooperate with the customer in prosecuting a claim against the person causing such damage and the customer shall be subrogated to the right of recovery by the Telephone Company for the damages to the extent of such payment.

2.3.2 Ownership of Facilities and Theft

Facilities utilized by the Telephone Company to provide service under the provisions of this tariff shall remain the property of the Telephone Company. Such facilities shall be returned to the Telephone Company by the customer, whenever requested, within a reasonable period following the request in as good condition as reasonable wear will permit.

2.3.3 Equipment Space and Power

The customer shall furnish or arrange to have furnished to the Telephone Company, at no charge, equipment space and electrical power required by the Telephone Company to provide services under this tariff at the points of termination of such services. The selection of ac or dc power shall be mutually agreed to by the customer and the Telephone Company. The customer shall also make necessary arrangements in order that the Telephone Company will have access to such spaces at reasonable times for installing, testing, inspecting, repairing or removing Telephone Company services. Customer shall prepare its site for and accept delivery of any equipment before the requested service start date. Customer shall provide reasonable access for Carrier to install, maintain, or remove any equipment.

SECTION 2 - GENERAL REGULATIONS, (CONT'D.)

2.3 Obligations of the Customer, (Cont'd.)

2.3.4 Availability for Testing

The services provided under this tariff shall be available from the Telephone Company at times mutually agreed upon in order to permit the Telephone Company to make tests and adjustments appropriate for maintaining the services in satisfactory operating condition. Such tests and adjustments shall be completed within a reasonable time. No credit will be allowed for any interruptions involved during such tests and adjustments.

2.3.5 Design of Customer Services

The customer shall be solely responsible, at its own expense, for the overall design of its services and for any redesigning or rearrangement of its services which may be required because of changes in facilities, operations or procedures of the Telephone Company, minimum protection criteria or operating or maintenance characteristics of the facilities.

2.3.6 References to the Telephone Company

The customer may advise End Users that certain services are provided by the Telephone Company in connection with the service the customer furnishes to End Users; however, the customer shall not represent that the Telephone Company jointly participates in the customer's services.

SECTION 2 - GENERAL REGULATIONS, (CONT'D.)

2.3 Obligations of the Customer, (Cont'd.)

2.3.7 Claims and Demands for Damages

(A) With respect to claims of patent infringement made by third persons, the customer shall defend, indemnify, protect and save harmless the Telephone Company from and against all claims arising out of the combining with, or use in connection with, the services provided under this tariff, any circuit, apparatus, system or method provided by the customer.

(B) The customer shall defend, indemnify, protect and save harmless the Telephone Company from and against any and all suits, claims, and demands by third persons arising out of the construction, installation, operation, maintenance, or removal of the customer's circuits, facilities, or equipment connected to the Telephone Company's services provided under this tariff, including, without limitation, Workmen's Compensation claims, actions for infringement of copyright and/or unauthorized use of program material, libel and slander actions based on the content of communications transmitted over the customer's circuits, facilities or equipment, and proceedings to recover taxes, fines, or penalties for failure of the customer to obtain or maintain in effect any necessary certificates, permits, licenses, or other authority to acquire or operate the services provided under this tariff; provided, however, the foregoing indemnification shall not apply to suits, claims, and demands to recover damages for damage to property, death, or personal injury unless such suits, claims or demands are based on the tortious conduct of the customer, its officers, agents or employees.

(C) The customer shall defend, indemnify and save harmless the Telephone Company from and against any suits, claims, losses or damages, including punitive damages, attorney fees and court costs by the customer or third parties arising out of any act or omission of the customer in the course of using services provided under this tariff.

SECTION 2 - GENERAL REGULATIONS, (CONT'D.)

2.3 Obligations of the Customer, (Cont'd.)

2.3.8 Traffic Information

(A) Customer shall provide Signaling Data (as defined below) and shall not, directly or indirectly, including in concert with a third party, strip, alter, modify, add, delete, change, mask, manipulate, or incorrectly assign any Signaling Data. Signaling Data shall, at a minimum, include: (a) information that accurately reflects the geographic location of the end user that originated and/or dialed the call, when including such information is technically feasible, (b) calling party number as defined in 47 C.F.R. Section 64.1600(c) ("CPN"), (c) Automatic Number Identification as defined in 47 C.F.R. Section 64.1600(b) ("ANI"), (d) Charge Number as defined in 47 C.F.R. Section 64.1600(d), (e) Jurisdictional Indicator Parameter ("JIP") and (f) any other signaling data that affects the terminating Party's ability to jurisdictionalize traffic. If it is determined that Customer has: (a) directly or indirectly made any such addition, deletion, change, mask, manipulation, alteration, modification, or incorrect assignment, or (b) intentionally or unintentionally failed to provide any Signaling Data, all of Customer's traffic, including prior traffic, will be re-rated to the highest tariff rate. Upon request, Telephone Company will provide to Customer available Signaling Data for traffic terminated to Customer.

(B) Where SS7 connections exist, customer will include the original and true Line Information, including the Calling Party Number (CPN), in the information transmitted to the Telephone Company for each call.

(C) If customer is passing Line Information but the Telephone Company is not properly receiving information, the parties will work cooperatively to correct the problem.

(D) For transit traffic, if the original and true CPN is not received from the originating third party, the Telephone Company cannot forward the CPN and will not be billed as the default originator.

SECTION 2 - GENERAL REGULATIONS, (CONT'D.)

2.3 Obligations of the Customer, (Cont'd.)

2.3.9 Jurisdictional Report Requirements*

(A) In this section the terms "trunk group" shall be assumed to also represent a single line or trunk.

(B) Reporting by the customer of the expected jurisdictional use of services is required because the Telephone Company cannot determine the actual jurisdiction of the customer's usage from every type of call detail recording. In some cases the Telephone Company cannot record the customer's usage of the service at all. The information reported by the customer will be used by the Telephone Company in an effort to determine the appropriate charges, as set forth in 2.3.10 following. The customer must always report this information for those services or portions of services for which the actual jurisdictional use cannot be determined by Telephone Company. * (Pursuant to Federal Communications Commission order FCC 85-145 released April 16, 1985, interstate usage is to be developed as though every call that enters a customer network at a point within the same state as that in which the called station (as designated by the called station number) is situated is an intrastate communication and every call for which the point of entry is in a state other than that where the called station (as designated by the called station number) is situated is interstate in nature.)

(1) When a customer orders a new Access Service, the customer shall, in its order, state the proportion of the service which is to be provided for interstate use. This proportion is the Percent for Interstate Use or PIU. The customer can either specify one general PIU for the service usage or the customer can specify an 800 terminating PIU and a residual PIU. All PIUs shall be stated as whole number percentages. If the customer chooses to report one general Percent for Interstate Use, then the general PIU will be the customer's best estimate of the percentage of the total use of the trunk group that will be interstate in nature.

SECTION 2 - GENERAL REGULATIONS, (CONT'D.)

2.3 Obligations of the Customer, (Cont'd.)

2.3.9 Jurisdictional Report Requirements, (Cont'd.)

(B) (1), (Cont'd.)

If the customer chooses to provide a separate 800 terminating PIU, then that PIU will be the customer's best estimate of the percentage of the total 800 terminating use of the trunk group usage that will be interstate in nature. The residual PIU would then be the customer's best estimate of the percentage of the total trunk group usage that will not be 800 terminating usage and will be interstate in nature.

The reported Percentage(s) for Interstate Use PIU(s) will be used in the determination of all interstate and intrastate charges for the trunk group, as set forth in 2.3.10 following, as well as for the associated charges for transport and port charges. The PIU(s) remains in effect until it is superseded by a revised PIU(s), as set forth in (3) following.

When the customer determines that any currently effective PIU(s) for one or more trunk groups is no longer accurate, the customer shall report a revised PIU(s) for each trunk group. The customer can report the new PIU(s) to the Telephone Company in writing. The report must clearly identify each trunk group, the account number under which it is billed, and both the current and revised PIU(s). The revised PIU(s) will become effective on the first day of the next monthly billing period that begins at least 15 business days after the day on which the customer reports the revised PIU(s) to the Telephone Company. No revisions to bills preceding the effective date of the revised PIU(s) will be made based on this report.

If no PIU is submitted as specified herein, then the PIU will be set on a default basis of 50 percent interstate traffic and 50 percent intrastate traffic.

The Telephone Company will charge the intrastate terminating switched access rates to Customers for those minutes lacking jurisdictional information that are in excess of a reasonable percentage (10%) of minutes for which this information is not transmitted. For example, if 40% of a Customer's minutes sent to the Telephone Company do not contain sufficient originating information to allow the Telephone Company to determine the originating location, the Telephone Company would apply these provisions to those minutes exceeding the 10% "floor," or 30% in this example.

SECTION 2 - GENERAL REGULATIONS, (CONT'D.)

2.3 Obligations of the Customer, (Cont'd.)

2.3.9 Jurisdictional Report Requirements, (Cont'd.)

(B) (Cont'd.)

(2) NPA-NXX Surrogate

If the customer's end users utilize NPA-NXXs from outside of a local market to terminate Transit calls, customer shall report an NPA-NXX Surrogate, which shall be customer's estimate of Transit traffic that appears to be access traffic. For example, a cellular end user with an NPA-NXX different than the market in which the end user is roaming and terminating a Transit call or an end user assigned an NPA-NXX from a market different than the market in which the end user is terminating Transit calls.

(3) Call Classification Report Verification

If a billing dispute arises or a regulatory commission questions the PIU, the Telephone Company will ask the customer to provide the data the customer uses to determine the PIU. The customer shall supply the data within 15 days of the Telephone Company request. The customer shall keep records of call detail, including not altering directly or indirectly with a third party call origination or termination data from which the Call Classification can be ascertained. Upon request of the Telephone Company, customer shall make the records available for inspection as reasonably necessary for purposes of verification. Requests for verification shall be limited to no more than two per year, except in extreme circumstances. Audits may be conducted by independent auditors if the Telephone Company and the customer or the customer alone is willing to pay the expenses of the audit.

SECTION 2 - GENERAL REGULATIONS, (CONT'D.)

2.3 Obligations of the Customer, (Cont'd.)

2.3.10 Determination of Interstate Charges for Mixed Interstate and Intrastate Tandem Service

When mixed interstate and intrastate Service is provided, all charges (i.e., nonrecurring, monthly and/or usage) including the associated charges for transport and port charges and optional features, will be prorated between interstate and intrastate. The Percentage for Interstate Use PIU(s) reported as set forth in 2.3.9 preceding will serve as the basis for prorating the charges. The percentage of a Tandem Service to be charged as interstate is applied in the following manner:

(A) For monthly and nonrecurring chargeable rate elements

(1) Tandem Services Except Direct-Trunk Transport Facilities or Entrance Facilities

Multiply the general PIU or the residual PIU, if the customer has chosen to provide usage type PIUs, times the quantity of chargeable elements times the stated applicable tariff rate per element

(2) Direct-Trunked Transport Facilities and Entrance Facilities

Multiply the Direct-Trunked Transport Facility or Entrance Facility PIU, times the quantity of chargeable elements times the stated applicable tariff rate per element.

(B) For all Tandem Services usage sensitive chargeable rate elements:

(1) If the actual jurisdiction of the usage can be reasonably identified, multiply the actual measured use that is identified by jurisdiction times the applicable stated tariff rate.

(2) If the customer has chosen to provide one general PIU for all usage types, then multiply the general PIU times actual usage (i.e., measured or Telephone Company assumed average usage) which cannot be reasonably jurisdictionally identified times the stated tariff rate. If the customer has chosen to provide separate usage type PIUs and the residual PIU, then multiply the usage type PIU or the residual PIU times the corresponding actual usage type minutes of use times the stated applicable tariff rate.

SECTION 2 - GENERAL REGULATIONS, (CONT'D.)

2.3 Obligations of the Customer, (Cont'd.)

2.3.11 Certification of Tandem Services As Intrastate

(A) Determination of Jurisdiction of Tandem Service

Jurisdiction refers to the classification of a service as interstate (subject to the jurisdiction of the Federal Communications Commission) or as intrastate (subject to the jurisdiction of a state regulatory body). Every call that enters a customer network at a point within the same state as that in which the called station (as designated by the called station number) is situated is an intrastate communication and every call for which the point of entry is in a state other than that where the called station (as designated by the called station number) is situated is an interstate communication.

(B) Jurisdictional Use Certification Requirement

When a customer orders a service from this tariff, the customer shall certify in its order that the service meets the requirements for classification as intrastate. The customer shall be responsible for advising the Telephone Company of any changes in such classification.

2.3.12 Certification of Tandem Services As Access and Transit

When a customer orders a Tandem Service from this tariff, the customer shall certify in its order that the traffic it is sending via the Tandem Service meets the requirements for Call Classification as Access and/or Transit Service. The customer shall be responsible for advising the Telephone Company of any changes in such classification.

SECTION 2 - GENERAL REGULATIONS, (CONT'D.)

2.3 Obligations of the Customer, (Cont'd.)

2.3.13 Forecasts

Customer shall exchange technical descriptions and forecasts of its interconnection and traffic requirements in sufficient detail necessary to establish the interconnections required to assure traffic completion to and from all End Users in their respective designated service areas.

2.3.14 Coordination with Respect to Network Contingencies

The customer shall, in cooperation with the Telephone Company, coordinate in planning the actions to be taken to maintain maximum network capability, including following natural or manmade disasters which affect telecommunications services.

2.3.15 Updating Data Bases

The Telephone Company and customer shall use the Local Exchange Routing Guide (LERG) to provision the appropriate NPA NXXs. Customer shall be responsible for updating its routing tables and internal databases to reflect changes in the Telephone Company profile and terminations.

2.3.16 Resale of Services

Customer agrees not to resell the Telephone Company service in any manner without prior written consent of the Telephone Company.

2.3.17 Compliance with Laws

Customer shall comply with all applicable laws and regulations in its use of the service. Customer is solely responsible for all products and services it provides to its End Users and to other carriers.

SECTION 2 - GENERAL REGULATIONS, (CONT'D.)

2.3 Obligations of the Customer, (Cont'd.)

2.3.18 Exchange of Traffic and Information

All facilities interconnected to the Telephone Company by Customer shall be two-way in nature, unless otherwise agreed in writing by the Telephone Company. Customer shall accept both originating and terminating traffic from the Telephone Company. At all times, Customer shall provide facilities within its network that are necessary for routing, transporting, measuring, and billing of traffic originated by other customers of the Telephone Company and for delivering traffic to the Telephone Company for termination to other carriers. Customer shall transmit traffic in the standard format compatible with the Telephone Company's network as referenced in Telcordia BOC Notes on LEC Networks Practice No. SR-TSV-002275, and terminate the traffic it receives in that standard format to the proper address on its network. Customer shall exercise best efforts in responding to requests by the Telephone Company to install additional facilities and capacity with the customer to accommodate traffic volumes and maintain the highest network quality standards. Customer agrees that Telephone Company may share certain customer information with other customers of the Telephone Company for the sole purpose of providing service.

2.3.19 Non-Authorized Traffic

Customers agree to not send Carrier Non-Authorized Traffic (i.e., traffic that is not Transit and Access traffic, including 911, 411, 976, directory assistance, and 0+ operator services local calls). Telephone Company will block any Carrier Non-Authorized Traffic sent to the Telephone Company switches and will have no obligation to carry such traffic. Customer will not send to the Telephone Company local traffic that is destined for the network of a third party carrier unless Customer has the authority to exchange traffic with that carrier.

SECTION 2 - GENERAL REGULATIONS, (CONT'D.)

2.3 Obligations of the Customer, (Cont'd.)

2.3.20 Customer Responsibility

Customers seeking to cancel service for traffic terminating to the Company have an obligation to cease sending such traffic to the Company's network. Customers will remain responsible for traffic originating from the Company's network if the Customer accepts such traffic.

2.3.21 Determination of InterMTA and IntraMTA Traffic

CMRS provider will have the responsibility of providing, on a quarterly basis (or as otherwise agreed to by the Company), a report to the Company providing the percentage of the CMRS provider's traffic terminated to the Company that is intraMTA or interMTA. The report will also detail what percentage of the interMTA traffic is intrastate and what percentage is interstate (PIU).

Reports regarding the percentages of intraMTA or interMTA traffic (and the intrastate or interstate jurisdiction of interMTA traffic) shall be based on a reasonable traffic study conducted by the CMRS provider and available to the Company upon request. Upon reasonable written notice, the Company or its authorized representative shall have the right to conduct a review and verification of the CMRS provider's reported percentages. This includes on-site verification reviews at the CMRS provider's or vendor locations. The review may consist of an examination and verification of data involving records, systems, procedures and other information related to the traffic originated by the CMRS provider and terminated to the Company. The customer shall keep records of call detail, including not altering directly or indirectly with a third party call origination or termination data from which the call jurisdiction can be ascertained. The CMRS provider will provide the Company with reasonable access to such information as is necessary to determine amounts payable under this tariff.

If the CMRS provider fails to provide the verifiable reports required under this section, the Company will apply a default percent interMTA of 50% (and a default PIU of 50% on all interMTA traffic), on all traffic originated by the CMRS provider for termination by the Company.

SECTION 2 - GENERAL REGULATIONS, (CONT'D.)

2.4 Payment Arrangements and Credit Allowances

2.4.1 Payment of Rates, Charges and Deposits

(A) The Telephone Company will, in order to safeguard its interests, require a customer which has a history of late payments or does not have acceptable credit, to make a deposit prior to or at any time after the provision of a service to the customer to be held by the Telephone Company as a guarantee of the payment of rates and charges. No such deposit will be required of a customer which is a successor of a company which has established credit with the Telephone Company and has no history of late payments to the Telephone Company. Such deposit may not exceed the estimated rates and charges for the service for a two-month period. The fact that a deposit has been made in no way relieves the customer from complying with the Telephone Company's regulations as to the prompt payment of bills. At such time as the provision of the service to the customer is terminated, the amount of the deposit will be credited to the customer's account and any credit balance that may remain will be refunded.

Such a deposit will be refunded or credited in any event to the account when the customer has acceptable credit or after the customer has established a one-year prompt payment record with no late payments at any time prior to the termination of the provision of the service to the customer. In case of a cash deposit, for the period the deposit is held by the Telephone Company, the customer will receive interest at the same percentage rate as that set forth in (C) following. Simple interest will be applied to the rate for the number of days from the date the customer deposit is received by the Telephone Company to and including the date such deposit is credited to the customer's account or the date the deposit is refunded by the Telephone Company. Should a deposit be credited to the customer's account, as indicated above, no interest will accrue on the deposit from the date such deposit is credited to the customer's account.

SECTION 2 - GENERAL REGULATIONS, (CONT'D.)

2.4 Payment Arrangements and Credit Allowances, (Cont'd.)

2.4.1 Payment of Rates, Charges and Deposits, (Cont'd.)

(B) The Telephone Company shall bill all charges incurred by and credits due to the customer under this tariff attributable to services. In addition, the Telephone Company shall bill in advance charges for all services to be provided during the ensuing billing period except for charges associated with service usage will be billed in arrears.

The Telephone Company will establish a bill day each month for each customer account. The bill will cover non-usage sensitive service charges for the ensuing billing period for which the bill is rendered, any known unbilled non-usage sensitive charges for prior periods and unbilled usage charges for the period after the last bill day through the current bill day. Any known unbilled usage charges for prior periods and any known unbilled adjustments will be applied to this bill. Payment for bills is due as set forth in (C) following. If payment is not received by the payment date, as set forth in (C) following in immediately available funds, a late payment penalty will apply as set forth in (C) following

(C) All bills dated as set forth in (B) preceding for service are due 30 days (payment date) after the bill day or by the next bill date (i.e., same date in the following month as the bill date) whichever is the shortest interval, except as provided herein, and are payable in immediately available funds. If such payment date would cause payment to be due on a Saturday, Sunday or Holiday (i.e., New Year's Day, Independence Day, Labor Day, Thanksgiving Day, Christmas Day, and a day when Martin Luther King Day, Washington's Birthday, Memorial Day, Columbus Day and Veterans Day are legally observed), payment for such bills will be due from the customer as follows:

(1) If such payment date falls on a Sunday or on a Holiday which is observed on a Monday, the payment date shall be the first non-Holiday day following such Sunday or Holiday. If such payment date falls on a Saturday or on a Holiday which is observed on Tuesday, Wednesday, Thursday or Friday, the payment date shall be the last non-Holiday day preceding such Saturday or Holiday.

SECTION 2 - GENERAL REGULATIONS, (CONT'D.)

2.4 Payment Arrangements and Credit Allowances, (Cont'd.)

2.4.1 Payment of Rates, Charges and Deposits, (Cont'd.)

(C) (1), (Cont'd.)

Further, if any portion of the payment is received by the Telephone Company after the payment date as set forth herein, or if any portion of the payment is received by the Telephone Company in funds which are not immediately available to the Telephone Company, then a late payment penalty shall be due to the Telephone Company. The late payment penalty shall be the portion of the payment not received by the payment date times a late factor. The late factor shall be the lesser of:

(a) the highest interest rate (in decimal value) which may be levied by law for commercial transactions, applied on a simple interest basis for the number of days from the payment due date to and including the date that the customer actually makes the payment to the Telephone Company, or

(b) 0.000493 per day, (annual percentage rate of 18.0% applied on a simple interest basis for the number of days from the payment date to and including the date that the customer actually makes the payment to the Telephone Company.

(D) In the event that a billing dispute concerning any charges billed to the customer by the Telephone Company is resolved in favor of the Telephone Company, any payments withheld pending settlement of the dispute shall be subject to the late payment penalty set forth in (C) preceding. If the customer disputes the bill on or before the payment date, and pays the undisputed amount on or before the payment date, any late payment charge for the disputed amount will not start until 10 working days after the payment date. If the billing dispute is resolved in favor of the customer, no late payment penalty will apply to the disputed amount. If the customer disputes the billed amount and the billing dispute is resolved in the favor of the customer, the customer will receive a refund for any amount overpaid plus interest if applicable as described below.

SECTION 2 - GENERAL REGULATIONS, (CONT'D.)

2.4 Payment Arrangements and Credit Allowances, (Cont'd.)

2.4.1 Payment of Rates, Charges and Deposits, (Cont'd.)

(D) (Cont'd.)

If a customer has overpaid because of a billing error, a refund in the amount of the overpayment will be made to the customer. If a claim for a refund pertaining to the overpayment was submitted by the customer within six months of the payment date, interest on the refund will be paid to the customer from the date of the overpayment to and including the date on which the refund is made to the customer. The interest rate will be 0.000493 per day (annual percentage rate of 18.0%), applied on a simple interest basis. Refunds will be made by crediting the customer's account.

(E) Adjustments for the quantities of services established or discontinued in any billing period beyond the minimum period set forth for services in other sections of this tariff will be prorated to the number of days or major fraction of days based on a 30 day month. The Telephone Company will, upon written request and if available, furnish such detailed information as may reasonably be required for verification of any bill.

(F) When a rate as set forth in this tariff is shown to more than two decimal places, the charges will be determined using the rate shown. The resulting amount will be rounded to the nearest penny (i.e., rounded to two decimal places).

(G) Customer shall pay to the Telephone Company all taxes and fees that are associated with Customer's lease, use or purchase of the Services, or any other transaction hereunder, including, but not limited to, any sales, use, federal excise or similar taxes, franchise fees, right-of-way fees, license fees and surcharges. All such taxes and fees shall be stated separately on Customer's invoices. To the extent Customer claims exemption from any tax or fee, Customer must provide a valid exemption certificate. Customer agrees to pay and to hold the Telephone Company harmless from and against any penalty, interest, additional tax, or other charge that may be levied or assessed as a result of a delay or failure of Customer, for any reason, to pay any tax or fee charged to Customer by the Telephone Company.

(H) Customer shall be liable for the payment of all fees and expenses (including, without limitation, attorney's fees and expenses, costs of investigation, and costs of litigation) reasonably incurred by the Telephone Company in collecting, or attempting to collect, any charges owed hereunder, including, without limitation, charges for services provided by the Telephone Company.

SECTION 2 - GENERAL REGULATIONS, (CONT'D.)

2.4 Payment Arrangements and Credit Allowances, (Cont'd.)

2.4.2 Minimum Periods

The minimum period for which services are provided and for which rates and charges are applicable is one month except for those services ordered with a longer minimum term.

When a service is discontinued prior to the expiration of the minimum period, charges are applicable, whether the service is used or not, as follows:

(A) When a service with a one-month minimum period is discontinued prior to the expiration of the minimum period, a one-month charge will apply at the rate level in effect at the time service is discontinued.

(B) When a service with a minimum period greater than one month is discontinued prior to the expiration of the minimum period, the applicable charge will be the total monthly charges, at the rate level in effect at the time service is discontinued, for the remainder of the minimum period, unless otherwise expressly specified under the terms of the written service order.

2.4.3 Cancellation of an Order for Service

Provisions for the cancellation of an order for service are established in the service order.

2.4.4 Credit Allowance for Service Interruptions

(A) General

A service is interrupted when it becomes unusable to the customer because of a failure of a facility component used to furnish service under this tariff or in the event that the protective controls applied by the Telephone Company result in the complete loss of service by the customer, through no fault of the customer directly or indirectly. An interruption period starts when an inoperative service is reported to the Telephone Company, and ends when the service is operative.

SECTION 2 - GENERAL REGULATIONS, (CONT'D.)

2.4 Payment Arrangements and Credit Allowances, (Cont'd.)

2.4.4 Credit Allowance for Service Interruptions, (Cont'd.)

(B) When a Credit Allowance Applies

In case of an interruption to any service, allowance for the period of interruption, when requested by the Customer in writing within ninety (90) days of the interruption and if not due to the negligence of the customer or the customer's end user, shall be as follows:

(1) For Dedicated Services, except as specified in the written service order, no credit shall be allowed for an interruption of less than 30 minutes. The customer shall be credited for an interruption of 30 minutes or more at the rate of 1/1440 of the monthly charges for the facility or service for each period of 30 minutes or major fraction thereof that the interruption continues for all services except as described herein. The Telephone Company may require joint out of service testing between the customer and the Telephone Company for investigation and correction of the interruption.

(2) For interruptions of Services other than those provided for in 2.4.4.(B).(1), the Customer shall be credited for an interruption of 24 hours or more at the rate of 1/30 of the applicable fixed monthly rates, if any.

(3) The credit allowance(s) for service interruptions in any month shall not exceed applicable fixed monthly rates for that month for that particular rate element. An interruption period starts when an inoperative service is released by the customer to the Telephone Company for testing/repair and ends when the service is operative. The customer must make an inoperative circuit available for testing by the Telephone Company and provide access as needed. Suspension of the calculated interruption period will occur when access to the customer premises cannot be gained or the customer does not release the circuit experiencing trouble.

SECTION 2 - GENERAL REGULATIONS, (CONT'D.)

2.4 Payment Arrangements and Credit Allowances, (Cont'd.)

2.4.4 Credit Allowance for Service Interruptions, (Cont'd.)

(B) When a Credit Allowance Applies, (Cont'd.)

(4) No credit shall be allowed for interruptions required to perform preventative or routine maintenance, or to perform software updates when the customer has been notified at least 24 hours prior to such occurrences.

(5) The monthly charges used to determine the credit shall be the recurring, non-usage sensitive charges associated with that rate element (less any credits) that is inoperative.

(C) When A Credit Allowance Does Not Apply

No credit allowance will be made for:

(1) Interruptions caused by the negligence of the customer.

(2) Interruptions of a service due to the failure of equipment or systems provided by the customer or others.

(3) Interruptions of a service during any period in which the Telephone Company is not afforded access to the premises where the service is terminated.

SECTION 2 - GENERAL REGULATIONS, (CONT'D.)

2.4 Payment Arrangements and Credit Allowances, (Cont'd.)

2.4.4 Credit Allowance for Service Interruptions, (Cont'd.)

(C) When a Credit Allowance Does Not Apply, (Cont'd.)

(4) Interruptions of a service when the customer has released that service to the Telephone Company for maintenance purposes, to make rearrangements, or for the implementation of an order for a change in the service during the time that was negotiated with the customer prior to the release of that service.

(5) Periods when the customer elects not to release the service for testing and/or repair and continues to use it on an impaired basis.

(6) An interruption or a group of interruptions, resulting from a common cause, for amounts less than one dollar.

(D) Use of an Alternative Service Provided by the Telephone Company

Should the customer elect to use an alternative service provided by the Telephone Company during the period that a service is interrupted, the customer must pay the tariffed rates and charges for the alternative service used.

(E) Temporary Surrender of a Service

In certain instances, the customer may be requested by the Telephone Company to surrender a service for purposes other than maintenance, testing or activity relating to a service order. If the customer consents, a credit allowance will be granted. The credit allowance will be 1/1440 of the monthly rate for each period of 30 minutes or fraction thereof that the service is surrendered. In no case will the credit allowance exceed the monthly rate for the service rendered in any one monthly billing period.

SECTION 2 - GENERAL REGULATIONS, (CONT'D.)

2.4 Payment Arrangements and Credit Allowances, (Cont'd.)

2.4.5 Reestablishment of Service Following Fire, Flood or Other Occurrence

(A) Nonrecurring Charges Do Not Apply

Charges do not apply for the reestablishment of service following a fire, flood or other occurrence attributed to an Act of God provided that:

(1) The service is for the same customer.

(2) The service is at the same location on the same premises.

(3) The reestablishment of service begins within 60 days after Telephone Company service is available. (The 60 day period may be extended a reasonable period if the renovation of the original location on the premises affected is not practical within the allotted time period).

(4) The services is the same type as that provided previous to the occurrence.

(5) The customer is current for all charges for services.

(B) Nonrecurring Charges Apply

Nonrecurring Charges apply for establishing service at a different location on the same premises or at a different premise pending reestablishment of service at the original location.

2.4.6 Title or Ownership Rights

The payment of rates and charges by customers for the services offered under the provisions of this tariff does not assign, confer or transfer title or ownership rights to proposals or facilities developed or utilized, respectively, by the Telephone Company in the provision of such services.

SECTION 2 - GENERAL REGULATIONS, (CONT'D.)

2.4 Payment Arrangements and Credit Allowances, (Cont'd.)

2.4.7 Ordering, Rating and Billing of Access Services Where More Than One Exchange Telephone Company is Involved

(A) When an Access Service is ordered by a customer where one portion of the service is provided by one Exchange Telephone Company and the other portion of the service is provided by another Exchange Telephone Company, the Telephone Company accepts and adheres to the Ordering and Billing Forum guidelines, Multiple Exchange Carrier Access Billing (MECAB) and Multiple Exchange Carrier Ordering and Design (MECOD).

(B) To the extent the Telephone Company jointly provides Access Service in conjunction with a third-party carrier that will bill Interexchange Carrier customers of that third-party carrier's switched access service, pursuant to that third-party carrier's tariff or other authority, for that third party carrier's portion of the total service, the Telephone Company and third-party carriers(s) will enter into a billing agreement with all billing carriers which is consistent with the provisions contained in MECAB. Access Service calls routed to an Incumbent Local Exchange Carrier's (ILEC) Tandem Switching facility will conform to the LATA restrictions as defined both in said ILEC's switched access tariff and in MECAB.

(C) When the Telephone Company routes traffic to an Alternate Access Tandem, the Telephone Company will provide recorded usage records, in Exchange Message Interface (EMI) format, to the Alternate Access Tandem service provider. These records will be provided to the Alternate Access Tandem service provider upon request.

2.5 Notices

2.5.1 Any notices or other communications required or permitted to be given or the terms of this section shall be in hard-copy writing, unless otherwise specifically provided herein. Such notices or communications shall be sufficiently given if delivered personally, or if delivered by prepaid overnight express service, or if delivered by confirmed facsimile transmission and with a copy delivered thereafter either personally, or by prepaid overnight express service, to the Customer's authorized representative.

2.5.2 Notice shall be given to the Telephone Company's Vice President – Regulatory, 1 South Wacker Drive, Suite 200, Chicago, IL 60606. Facsimile: (312) 346-3276. A copy of each notice relating to an action, suit, proceeding or claim is to be sent simultaneously to the Telephone Company's General Counsel, 1 South Wacker Drive, Suite 200, Chicago, IL 60606. Facsimile: (312) 346-3276.

2.5.3 Either party may unilaterally change its designated representative and/or address for the receipt of notices by giving seven days' prior written notice to the other party in compliance with this section. Any notice or other communication shall be deemed given when received.

SECTION 3 – SERVICE DESCRIPTIONS

3.1 Tandem Service

3.1.1 Tandem Services are comprised of Transit and Access Services.

3.1.2 All facilities installed for provisioning Tandem Services are bi-directional, two-way in nature, unless expressly agreed to by the Telephone Company. Customer ordering Tandem Service agrees to accept additional facilities to accommodate traffic volume at reasonable fill rates.

3.1.3 Customer must be authorized to send traffic to third party Interconnected Telecommunications Carriers prior to delivering traffic to such parties using the Tandem Service.

3.1.4 In the event Customer sends traffic through the Telephone Company to a carrier with whom customer does not have a traffic exchange agreement, then Customer will indemnify the Telephone Company against any and all charges levied by such third party carrier, including any charges related to such traffic and any attorneys fees and expenses.

3.1.5 The Telephone Company will bill its respective portion of the charges directly to the Customer, and will not function as a billing intermediary, e.g. clearinghouse.

3.1.6 The Terminating Carrier shall not bill the Telephone Company for terminating any Tandem Service traffic, whether identified or unidentified, i.e. whether the Telephone Company is sent CPN or is not sent CPN by the Originating Carrier.

3.1.7 For Access traffic routed from or to Non-Carriers, the Company will function as an End Office provider rather than as an Access Tandem provider.

SECTION 3 – SERVICE DESCRIPTIONS, (CONT'D.)

3.2 Transit Service

3.2.1 Transit Service allows an Originating Carrier to send all Section 251 (b)(5) Traffic, ISP-Bound Traffic, IntraLATA Toll Traffic (not delivered via IXC), and/or CMRS IntraMTA Traffic to a Terminating Carrier through the Telephone Company tandem. A Transit rate element applies to all MOUs transmitted over the Telephone Company network. The Originating Carrier is responsible for payment of the appropriate rates unless otherwise specified. Transit Service does not include 911, 411, 976, 311, 611, 500, 950, Directory Assistance, 0+ local, and 0+ operator services. Notwithstanding any other provision, Customer appoints Telephone Company to act on its behalf for the limited purpose of establishing arrangements for the termination of Transit Traffic to Terminating Carriers. This authority is limited to the establishment of the technical and operational aspects of such arrangements.

At the request of the Customer, Telephone Company will provide electronic terminating Transit billing records to the Customer to assist in their billing process. The records will be provided in standard EMI format and will be delivered to the Customer either weekly or monthly utilizing an electronic delivery method negotiated on a case by case basis. Rates are listed in section 4.1.

SECTION 3 – SERVICE DESCRIPTIONS, (CONT'D.)

3.2 Transit Service, (Cont'd.)

3.2.2 Transit Diagram

Carrier Switch A is the Originating Carrier
Carrier Switch B is the Terminating Carrier

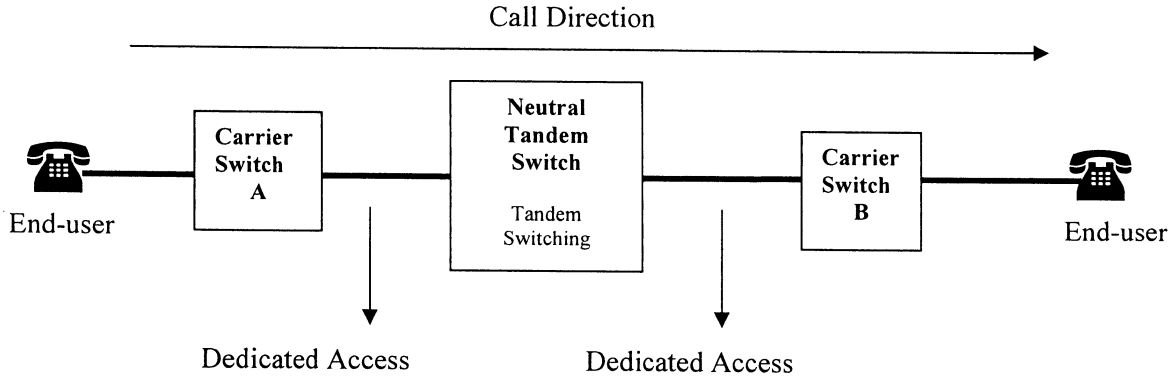

3.2.3 Customer is responsible for compliance with all third party traffic termination arrangements, including primary toll carrier agreements, and optional and/or extended calling area plans.

3.2.4 Customer, the Originating Carrier, will be charged a Tandem Transit MOU charge for all Transit traffic delivered to the Telephone Company, including On-Net and Off-Net traffic, except as provided in 3.2.5 below. The Tandem Transit MOU charge may differ based on the Exchange of the terminating number.

3.2.5 If the Company re-routes an On-Net call to an Alternate Transit Tandem due to a third party failure or insufficient capacity on the Telephone Company network to terminate the call, the Customer may be charged a tandem transit MOU charge by the Alternate Transit Tandem Company. If the Customer is charged a tandem transit MOU charge by the Alternate Transit Tandem Company, the Customer will not be charged a Tandem Transit MOU by the Company. If the Company is billed by the Alternate Transit Tandem Company for that traffic, then the Company will charge Customer the same Tandem Transit MOU charge that the Company is billed by the Alternate Transit Tandem Company.

3.2.6 Transit Service shall be on a Meet Point Billing ("MPB") basis, with the Terminating Carrier and the Telephone Company billing their respective portions of the charges directly to the Originating Carrier, and neither the Terminating Carrier nor the Telephone Company will be required to function as a billing intermediary, e.g. clearinghouse.

SECTION 3 – SERVICE DESCRIPTIONS, (CONT'D.)

3.3 Access Service

3.3.1 Access Service enables Interconnected Carriers or the Company to originate Toll Service to Toll Service providers and Toll Service providers to terminate Toll Services to Interconnected Carriers or the Company. Access Services do not include 911, 411, 976, 311, 611, 500, 950, Directory Assistance, 0+ local, and 0+ operator services.

Access Service for traffic originating to Toll Service providers can be delivered either over a direct connection between the Company and Toll Service provider when the connection exists, or when the connection does not exist, via an Alternate Access Tandem.

Access Service for traffic terminating to Interconnected Carriers or Company End Office can be delivered either over a direct connection between the Company and Toll Service provider when the connection exists, or when the connection does not exist, via an Alternate Access Tandem.

SECTION 3 – SERVICE DESCRIPTIONS, (CONT'D.)

3.3 Access Service, (Cont'd.)

3.3.2 Access Diagrams

Company operating as Access Tandem provider

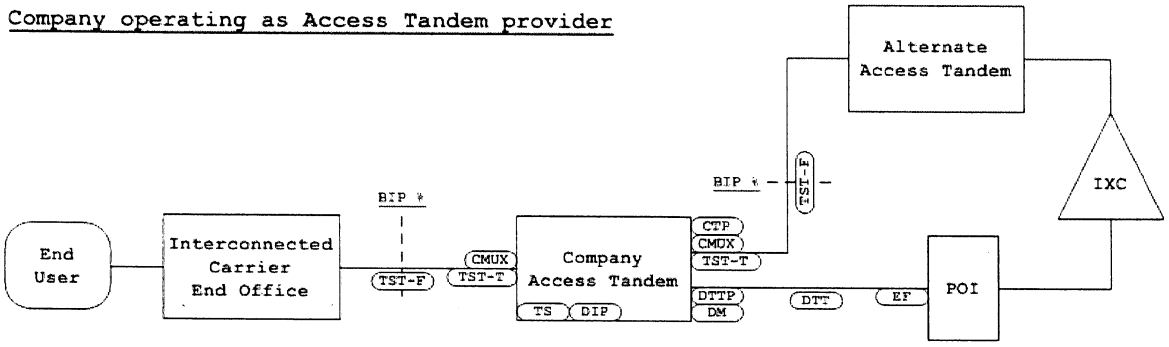

Company operating as End Office provider

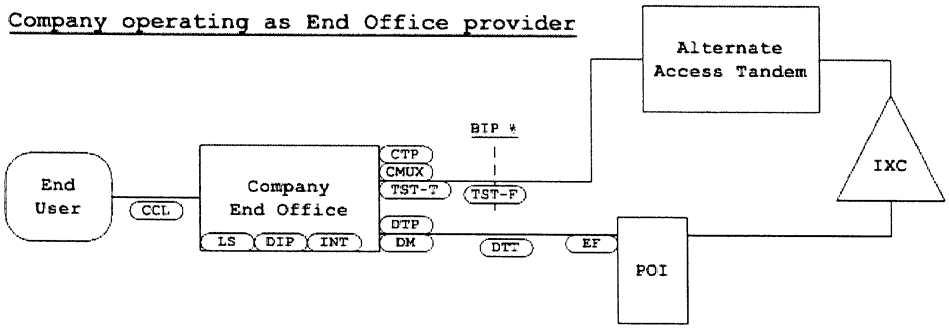

Element	Element Description
DIP	Database Query Charge (where it occurs)
CCL	Carrier Common Line
LS	Local Switching
INT	Interconnection
CTP	Common Trunk Port
TST-T	Tandem Switched Transport – Termination
TST-F	Tandem Switched Transport – Facility
CMUX	Common Transport Multiplexing
TS	Tandem Switching
DTP	Dedicated Trunk Port
DTTP	Dedicated Tandem Trunk Port
DM	Dedicated Multiplexing
DTT	Direct-Trunked Transport (fixed and per mile)
EF	Entrance Facility

SECTION 3 – SERVICE DESCRIPTIONS, (CONT'D.)

3.3 Access Service, (Cont'd.)

3.3.3 Customer is responsible for compliance with all third party traffic termination arrangements, including primary toll carrier agreements, and optional and/or extended calling area plans.

3.3.4 In addition to all applicable nonrecurring and monthly recurring charges, Customer for Access Service will be charged a MOU charge for all Access Service traffic delivered to or from the Telephone Company. The 800 Database Query Charge will apply for each 800 call query received at the Company's (or its provider's) Toll-Free 800 database.

3.3.5 Customer for Access Service is the Toll Service provider

3.3.6 Access Service shall be on a Meet Point Billing ("MPB") basis, with all applicable carriers billing their respective portions of the charges directly to the Toll Service provider, and Telephone Company will not be required to function as or use a billing intermediary, e.g. clearinghouse.

3.3.7 The rates charged for Switched Access elements identified herein are applied in a manner such that the rate charged by the Company reasonably approximates the rate charged by the relevant Incumbent Local Exchange Carrier for each Switched Access element.

3.3.8 The terminating Tandem-Switched Transport rate schedules are bifurcated into "Standard" and "Affil PCL" rates. The Affil PCL terminating Tandem-Switched Transport rates[1] apply to terminating traffic traversing a Company tandem switch when the terminating carrier is a Company-affiliated price cap carrier. All other terminating Tandem-Switched Transport traffic is subject to the Standard terminating Tandem-Switched Transport rates.[2] (N) (N)

[1] Affil PCL terminating Tandem-Switched Transport rates are benchmarked to the price cap LEC rates which are subject to the step down specified in Commission Rules 51.907(g)(2) and 51.907(g). (N)

[2] Standard terminating Tandem-Switched Transport rates are benchmarked to the price cap LEC rates which are not subject to the step down specified in Commission Rules 51.907(g)(2) and 51.907(g). (N)

SECTION 3 – SERVICE DESCRIPTIONS, (CONT'D.)

3.4 Collocation

Unless otherwise specified herein, the general regulations specified in Section 3, apply and are in addition to the regulations for collocation specified in this tariff. Rates and charges for the individual collocation arrangements are contained in Section 4.3.

3.4.1 General

(A) Collocation provides for access to central office cross connect points that will serve as a point of interconnection for the exchange of traffic with the Telephone Company.

(B) Connection to physical collocation or cageless collocation is available through fiber optic facilities, or leased facilities of a third party.

3.4.2 Forecasting and Forecast Requirements

(A) Forecast Requests - The Telephone Company will request from the Customer, forecasts on a semiannual basis, with each forecast covering a two-year period. The Customer will be required to update the near-term (six month) forecasted application dates. Information requested will include central office, month applications are expected to be sent, requested in-service month, and square footage required. For augments, the Customer may elect to substitute alternative CLLI codes within a LATA for the forecasted demand.

(1) If the Telephone Company has a written guarantee of reimbursement, it will examine forecasts for offices in which it is necessary to condition space, and discuss these forecasts with Customer to determine the required space to be conditioned.

SECTION 3 – SERVICE DESCRIPTIONS, (CONT'D.)

3.4 Collocation, (Cont'd.)

3.4.2 Forecasting and Forecast Requirements, (Cont'd.)

(A) Forecast Requests, (Cont'd.)

(2) If the Telephone Company commits to condition space based on forecasts, Customer will give the Telephone Company a non-refundable deposit equal to the application fee.

(3) The Telephone Company will perform initial reviews of requested central offices forecasted for the next six months to identify potential problem sites.

(4) The Telephone Company will consider forecasts in staffing decisions.

(5) The Telephone Company will enter into planning discussions with forecasting Customer to validate forecasts, discuss flexibility in potential trouble areas, and assist in application preparation.

(B) The Telephone Company will aggregate data received in Customer forecasts and provide Customer with information which includes the central offices requested, the number of applications for each central office, and any previously known space constraints.

(C) Unforecasted demand (including augments) will be given a lesser priority than forecasted demand. The Telephone Company will make every attempt to meet standard intervals for unforecasted requests. However, if unanticipated requests push demand beyond the Telephone Company's capacity limits, the Telephone Company will negotiate longer intervals as required (and within reason).

(D) Interval adjustments will be discussed with the Customer at the time the application is received. In general, if forecasts are received less than two months prior to the application date, the interval start day may be postponed as follows:

(1) No Forecast Received—Interval start date commences two months after application receipt date.

SECTION 3 – SERVICE DESCRIPTIONS, (CONT'D.)

3.4 Collocation, (Cont'd.)

3.4.2 Forecasting and Forecast Requirements, (Cont'd.)

(D) (Cont'd.)

(2) Forecast Received One Month or Less Prior to Application Receipt Date - Interval start date commences two months after application receipt date.

(3) Forecast Received Greater than One Month and Less Than Two Months Prior to Application Receipt Date - Interval start date commences one month after application receipt date.

(4) Forecast Received Two Months or More Prior to Application Receipt Date - Interval start date commences on the application receipt date.

(E) The Telephone Company will inform all forecasting Customers of the total square footage available and the total number of Customers requesting space in that central office. The Telephone Company will offer each Customer an equal share of the central office space, and request applications immediately, with appropriate fees, to reserve the space. The Customers will have one month to respond. If a Customer does not respond within the specified time, its apportioned share will be allocated evenly among those that do respond.

(F) If there is not enough space available to provide all requesting Customers with a minimum configuration (i.e., 25 square feet), a drawing for the space will be held. The Telephone Company will inform each Customer of the number of requesting Customers and the quantity of Customers that can be accommodated in the available space. The Telephone Company will request applications immediately, with appropriate fees, to enter the drawing. Each Customer will have one month to respond or be ineligible for the drawing. Applications and associated fees will be returned to those not selected in the drawing.

SECTION 3 – SERVICE DESCRIPTIONS, (CONT'D.)

3.4 Collocation, (Cont'd.)

3.4.3 Termination of Arrangement

(A) The Telephone Company shall have the right to terminate a collocation arrangement at any time with respect to any area(s) of the Telephone Company central office premises which becomes the subject of a taking by eminent authority having such power. The Telephone Company shall notify the Customer of such termination immediately after it receives notice of the taking. The Customer shall have no claim against the Telephone Company for any relocation expenses, any part of any award that may be made for such taking or value of any unexpired arrangement that results from a termination by the Telephone Company under this provision, or any loss of business from full or partial interruption or interference due to any such termination

(B) If at anytime the Telephone Company reasonably determines that any Customer's facilities or equipment or the installation of the Customer's facilities or equipment does not meet the requirements of these terms and conditions, the Customer will be responsible for the costs associated with the removal or modifications of such facilities to render it compliant. If the Customer fails to correct any non-compliance with these standards within 15 days' written notice, the Telephone Company may have the facilities or equipment removed or the condition corrected at the Customer's expense, subject to the collocation dispute resolution procedures.

(C) If the Telephone Company reasonably determines that any Customer's activities, equipment or facilities are unsafe, or are in violation of any applicable fire, environmental, health, safety or other laws or regulations, or pose an immediate threat to the safety of the Telephone Company's employees or others or to the Telephone Company's network, the Telephone Company has the right to immediately stop such activities or the operation of such facilities or equipment without prior notice. The Customer will be charged for any costs incurred as a result of such actions.

SECTION 3 – SERVICE DESCRIPTIONS, (CONT'D.)

3.4 Collocation, (Cont'd.)

3.4.3 Termination of Arrangement, (Cont'd.)

(D) The Telephone Company may also discontinue service or cancel an application for the arrangement without incurring any liability for any of the following reasons.

(1) Upon non-payment of any sum owing to the Telephone Company for more than 30 days beyond the date of rendition of the bill for the arrangement, the Telephone Company may, on 30 days advance notice in writing to the Customer without incurring any liability, discontinue the furnishing of a new or existing arrangement, subject to the provisions for dispute resolution.

(2) The Telephone Company shall be prohibited from furnishing services by order of a court or other government authority having jurisdiction.

(3) In the event of fraudulent use of the Telephone Company's network, the Telephone Company may discontinue the arrangement without notice and/or seek legal recourse to recover all costs involved in enforcement of this provision.

(E) Grounds for Termination by the Telephone Company - The Telephone Company reserves the right to inspect the Customer's collocation arrangement to determine if the collocation arrangement is being used for interconnection. If the Telephone Company determines that the collocation arrangement is not being used for interconnection, the Telephone Company reserves the right to terminate the Customer's collocation service upon thirty (30) calendar days notice. If the Telephone Company elects to terminate a collocation arrangement pursuant to this section, the termination shall be governed by this Section 3.4.3.

SECTION 3 – SERVICE DESCRIPTIONS, (CONT'D.)

3.4 Collocation, (Cont'd.)

3.4.3 Termination of Arrangement, (Cont'd.)

(F) Termination by the Customer - A Customer must notify the Telephone Company in writing of its plans to terminate a collocation arrangement ("Customer Termination Notice"), and such Customer termination shall be governed by this Section 3.4.3.

(1) Termination After Completion If a Customer elects to terminate an existing collocation arrangement after a collocation arrangement has been completed, the termination will be effective thirty (30) calendar days after the Telephone Company's receipt of the Customer Termination Notice.

If Customer terminates a collocation arrangement under this section, the termination shall be governed by this Section 3.4.3 and the Customer remains responsible to pay any unpaid Nonrecurring Charges associated with the terminated arrangement as set forth in Section 4.3. If the collocation arrangement being terminated contains equipment in which a third party maintains an ownership or a security interest, the Customer shall include a list of any such owners and secured parties in the Customer Termination Notice.

(2) Termination Prior to Completion If the Customer elects to terminate a request for collocation when construction is in progress and prior to completion of the collocation arrangement, the termination will be effective upon the Telephone Company's receipt of the Customer Termination Notice. Application fees submitted will not be refunded. The Customer Termination Notice must be received by the Telephone Company prior to the Scheduled Completion Date to avoid incurring any monthly recurring charges.

SECTION 3 – SERVICE DESCRIPTIONS, (CONT'D.)

3.4 Collocation, (Cont'd.)

3.4.3 Termination of Arrangement, (Cont'd.)

(G) Effect Of Termination If the Telephone Company or Customer terminates a collocation arrangement under this Tariff, the following provisions shall apply:

(1) Equipment Removal and Monthly Recurring Charges - The Customer shall disconnect and remove its equipment from the designated collocation space by the effective date of the termination. Upon removal by the Customer of all its equipment from the collocation space, if the Customer does not restore the collocation space to its original condition at time of occupancy, the Customer will reimburse the Telephone Company for the cost to do so.

Due to physical and technical constraints, removal of the Customer's cables will be at the Telephone Company's option The Telephone Company reserves the right to remove the Customer's equipment if the Customer fails to remove and dispose of the equipment by the effective date of the termination. The Customer will be charged the appropriate additional labor charge in Section 4.3 for the removal and disposal of such equipment. All monthly recurring charges will continue to be charged to the Customer until the effective date of the termination or, at the Telephone Company's discretion, until any later date, not to exceed 60 days, that all equipment is removed and the collocation space is restored to its original condition at space turnover.

SECTION 3 – SERVICE DESCRIPTIONS, (CONT'D.)

3.4 Collocation, (Cont'd.)

3.4.4 Collocation Capacity

(A) Telephone Company Capacity - The Telephone Company's estimate of its present capacity (i.e., no more than an increase of 15% over the average number of applications received for the preceding three months in a particular geographic area) is based on current staffing and current vendor arrangements. If the forecasts indicate spikes in demand, the Telephone Company will attempt to smooth the demand via negotiations with the forecasting Customers. If the Telephone Company and the Customer fail to agree to smooth demand, the Telephone Company will determine if additional expenditures would be required to satisfy the spikes in demand.

(B) Vendor Delays - No party shall be excused from their obligations due to the acts or omissions of a party's subcontractors, material, person, suppliers or other third persons providing such products or services to such party unless such acts or omissions are the product of a force majeure event, or unless such delay or failure and the consequences thereof are beyond the reasonable control and without the fault or negligence of the party claiming excusable delay or failure to perform.

(C) Vendor Capacity - The Telephone Company will continuously seek to improve vendor performance for all central office work, including collocation. Since the vendors require notice in order to meet increases in demand, the Telephone Company will share Customer actual and forecasted demand with appropriate vendors, as required, subject to the appropriate confidentiality safeguards.

Customers may also contract with Telephone Company approved vendors directly for a variety of the functions required. Customers can contract directly for cage construction, electrical outlets, lighting, ground bar and point-of-termination bay (POT Bay) bay installation in their cages.

SECTION 3 – SERVICE DESCRIPTIONS, (CONT'D.)

3.4 Collocation, (Cont'd.)

3.4.5 Implementation of Collocation Charges

(A) The Telephone Company shall provide the Customer with a notice ("Scheduled Completion Notice") indicating the scheduled completion date ("Scheduled Completion Date") for the collocation arrangement. The Telephone Company shall also provide a notice that will remind the Customer of the Scheduled Completion Date and request the Customer to schedule and attend a "Collocation Acceptance Meeting" ("CAM"). Collocation charges will be implemented in accordance with this section regardless of the readiness of the Customer to utilize the completed collocation arrangement.

(1) Collection of Non-Recurring Charges - The Customer shall have ten business days from the receipt of a Telephone Company provided collocation schedule to pay 50% of the Nonrecurring Charges (NRCs) associated with the ordered collocation service. The balance of the NRCs ("NRC Balance") will be billed to the Customer upon Customers acceptance of the collocation arrangement or thirty (30) calendar days after the collocation arrangement is completed, whichever comes first.

(2) Commencement of Recurring Charges - Monthly recurring charges will commence upon Customer acceptance of the collocation arrangement or thirty (30) calendar days after the collocation arrangement is completed, whichever comes first ("Commencement Date"), and shall continue until terminated pursuant to Section 3.4.3.

SECTION 3 – SERVICE DESCRIPTIONS, (CONT'D.)

3.4 Collocation, (Cont'd.)

3.4.5 Implementation of Collocation Charges, (Cont'd.)

(A) (Cont'd.)

(3) Extension Request - A Customer may request to extend or delay the Scheduled Completion Date of a collocation arrangement for up to six (6) months. A Customer electing to extend the Scheduled Completion Date of a collocation arrangement must notify the Telephone Company in writing ("Extension Notice") within thirty (30) calendar days after receiving the Scheduled Completion Notice. In order for the Telephone Company to delay billing of monthly recurring charges for the applicable collocation arrangement, the Customer must remit to the Telephone Company the NRC Balance for the collocation arrangement with the Extension Notice. Monthly recurring charges will not be billed by the Telephone Company until the space for the collocation arrangement is accepted by the Customer or the six (6) month extension period has expired, whichever comes first. At any time during or after the extension period, if the Customer terminates its collocation arrangement, the termination shall be governed by Section 3.4.3.

(B) If the Telephone Company believes the space for the collocation arrangement is needed to satisfy another's Customer's collocation request prior to the end of the six (6) month extension period, the Telephone Company will notify the original Customer that its collocation space has been requested by another Customer. The original Customer will have up to five (5) business days after receipt of the notification to retain the collocation space by notifying the Telephone Company in writing that it desires to keep the space ("Retention Notice"). If the original Customer retains the collocation space, monthly recurring charges shall commence for the original Customer thirty (30) calendar days after the original Customer sends the Retention Notice or when the original Customer accepts the space, whichever comes first.

SECTION 3 – SERVICE DESCRIPTIONS, (CONT'D.)

3.4 Collocation, (Cont'd.)

3.4.6 Closure, Decommissioning or Sale of Premises

(A) Collocation arrangements will automatically terminate if the premises in which the collocation space is located is closed, decommissioned or sold and no longer houses the Telephone Company's network facilities. At least one hundred eighty (180) days written notice will be given to the Customer of events which may lead to the automatic termination of any such arrangement pursuant to this tariff, except when extraordinary circumstances require a shorter interval. In such cases, the Telephone Company will provide notice to the Customer as soon as practicable. The Telephone Company will work with the Customer to identify alternate collocation arrangements. The Telephone Company will work cooperatively with the Customer to minimize any potential for service interruption resulting from such actions.

SECTION 4 – RATES AND CHARGES

4.1 Transit Service Charges

		Usage Charge
4.1.1	Tandem Switching, per minute of use	
	Wireline	$0.003800
	Wireless	$0.003800
4.1.2	Database Charge	
	LNP Query - per query	$0.002002
4.1.3	Blocked Call Charge	
	Per Blocked Call	$0.001880

		Monthly Recurring Charge
4.1.4	Transit Dedicated Transport Facility	
	Per DS1 - First 5 miles	$210.00
	Per DS1 - Each additional mile	$ 15.00
4.1.5	Trunk Group Charge	
	First trunk group	$ 00.00
	Each additional trunk group	$ 50.00
4.1.6	Billing Records Charge	
	Per Market	$250.00

		Nonrecurring Charge
4.1.7	Transit Service Non-Recurring Charges	
	Per Market - Billing Records Charge	$500.00
	Per Service Order Fee:	$ 50.00
	Per Reconfiguration:	$150.00
	Install (per DS1)	$885.00

SECTION 4 – RATES AND CHARGES, (CONT'D.)

4.2 Access Service Charges

	Nonrecurring Charge	Monthly Recurring Charge
4.2.1 Entrance Facility		
Entrance Facility - (DS3)	Note 1	Note 1
Entrance Facility - (DS1)	Note 1	Note 1
4.2.2 Direct-Trunked Transport – Fixed		
Direct-Trunked Transport, per termination (DS3)		Note 1
Direct-Trunked Transport, per termination (DS1)		Note 1

Note 1: See the Company's Access Services Tariff FCC No. 2 at the following link https://apps.fcc.gov/etfs/public/lecTariffs.action?idLec=326. (T)

SECTION 4 – RATES AND CHARGES, (CONT'D.)

4.2 Access Service Charges, (Cont'd.)

	Monthly Recurring Charge
4.2.3 Direct-Trunked Transport – Per Mile	
Direct-Trunked Transport (DS3)	Note 1
Direct-Trunked Transport (DS1)	Note 1
4.2.4 Dedicated Multiplexing	Note 1

	Originating	Terminating
4.2.5 Dedicated Trunk Port, per DS1	$131.52	Note 1
4.2.6 Dedicated Tandem Trunk Port, per DS1	$78.72	Note 1

4.2.7 Tandem Switching, per minute of use (C)

Originating	Usage Charge Terminating Standard	Terminating Affil PCL
$0.001289	$0.001289	Note 1 (R)

(C)

Note 1: See the Company's Access Services Tariff FCC No. 2 at the following link https://apps.fcc.gov/etfs/public/lecTariffs.action?idLec=326. (T)

SECTION 4 – RATES AND CHARGES, (CONT'D.)

4.2 Access Service Charges, (Cont'd.)

		Usage Charge	
		Originating	Terminating
4.2.8	Tandem Switched Transport - Termination per minute of use, per termination	$0.000502	Note 1
4.2.9	Tandem Switched Transport – Facility per minute of use per mile	$0.000108	Note 1
4.2.10	Common Transport Multiplexing (DS3/DS1), per minute of use	$0.000083	Note 1
4.2.11	Common Trunk Port, per minute of use per minute of use	$0.000073	Note 1
4.2.12	Local Switching, per minute of use per minute of use	$0.005634	Note 1
4.2.13	Carrier Common Line per minute of use	$0.000000	Note 1

Note 1: See the Company's Access Services Tariff FCC No. 2 at the following link https://apps.fcc.gov/etfs/public/lecTariffs.action?idLec=326. (T)

SECTION 4 – RATES AND CHARGES, (CONT'D.)

4.2 Access Service Charges, (Cont'd.)

		Usage Charge
4.2.14	Interconnection Charge	
	Per minute of use	$0.0000000
4.2.15	Database Charges	
	LNP Query - per query	$0.0020020
	800 Query	
	Basic, per query	$0.0041410
	POTS translation, per query	$0.0000000
4.2.16	Blocked Call Charge	
	Per Blocked Call	$0.001880

4.2.17 Access Service Installation Charges

	Nonrecurring Charge
Per Service Order Fee:	$50.00
Per Reconfiguration:	$150.00
Install (per DS1)	$885.00

SECTION 4 – RATES AND CHARGES, (CONT'D.)

4.3 Collocation Charges

		Nonrecurring Charge	Monthly Recurring Charge
4.3.1	Application Fees		
	Initial	$5,000.00	
	Subsequent	$5,000.00	
	Augment	$2,500.00	
4.3.2	Engineering and Implementation		
	Initial Arrangements	$3,436.00	
	Subsequent Arrangements	$1,898.00	
	Cage Expansion and Additional Cable	$3,542.00	
	Additional Cabling	$1,334.00	
	Power Augment Only	$1,334.00	
	Cabling Plus Equipment – Cage less	$9,505.79	
	Cabling Only – Cage less	$7,320.29	
4.3.3	Site Survey/Report		
	Per request	$1,557.45	
4.3.4	SAC Cable and Frame Termination		
	DS1 - Per 28 – DCS	$2,103.03	
	DS1 - Per 28 – DCS		$ 400.47
	Per DS3/STS-1 – DSX	$ 521.29	
	Per DS3/STS-1 – DSX		$ 20.24
4.3.5	Land and Building		
	25 Square Feet		$ 465.40
	100 Square Feet		$ 984.50
	300 Square Feet		$2,416.50
	Additional 20 Square Feet		$ 143.20

SECTION 4 – RATES AND CHARGES, (CONT'D.)

4.3 Collocation Charges, (Cont'd.)

		Nonrecurring Charge	Monthly Recurring Charge
4.3.6	Heating, Ventilation and Air Conditioning Per 10 load amps		$ 7.03
4.3.7	Escorting Per technician, per 1/4 hour or fraction	$ 15.09	
4.3.8	DC Power Cabling and Fusing Charge Installation of 60 Amp Ampacity DC Power Feed -Customer Selected Fuse Size: Up to 60 Amps – Per Feed	$ 960.00	
4.3.9	DC Power Per number of load amps requested		$19.64
4.3.10	DC Power Feed Augment Load Amp Augment Per Collocation Arrangement	$ 200.00	
	Over Current Protector Augment Per Feed	$ 425.00	
4.3.11	Shelf, Bay Installation - Per shelf	$1,287.36	
	Per quarter equipment bay or fraction thereof		$12.44

4.3.12 Additional Labor Charges

Labor Rates	Time	Minimums	Billing Increments	Rate
Standard Business Hours	8am - 5pm (Local Time)	1 hour	Hour	$100 per hour
After Hours	5pm - 8am (Local Time)	1 hour	Hour	$200 per hour
Saturday, Sunday and Holidays	-----	2 hour	Hour	$250 per hour

SECTION 5 - SPECIAL ARRANGEMENTS

5.1 Special Construction

5.1.1 Basis for Charges

Where the Company furnishes a facility or service for which a rate or charge is not specified in the Company's tariffs, charges will be based on the costs incurred by the Company and may include:

(A) nonrecurring type charges;

(B) recurring type charges;

(C) termination liabilities; or

(D) combinations thereof.

5.1.2 Basis for Cost Computation

The costs referred to in 5.1.1 preceding may include one or more of the following items to the extent they are applicable:

(A) cost installed of the facilities to be provided including estimated costs for the rearrangements of existing facilities. Cost installed includes the cost of:

(1) equipment and materials provided or used,

(2) engineering, labor and supervision,

(3) transportation, and

(4) rights of way;

SECTION 5 - SPECIAL ARRANGEMENTS, (CONT'D.)

5.1 Special Construction, (Cont'd.)

5.1.2 Basis for Cost Computation, (Cont'd.)

(B) cost of maintenance;

(C) depreciation on the estimated cost installed of any facilities provided, based on the anticipated useful service life of the facilities with an appropriate allowance for the estimated net salvage;

(D) administration, taxes and uncollectible revenue on the basis of reasonable average costs for these items;

(E) license preparation, processing and related fees;

(F) tariff preparation, processing and related fees;

(G) any other identifiable costs related to the facilities provided; or

(H) an amount for return and contingencies.

5.1.3 Termination Liability

To the extent that there is no other requirement for use by the Company, a termination liability may apply for facilities specially constructed at the request of the customer.

(A) The termination liability period is the estimated service life of the facilities provided.

SECTION 5 - SPECIAL ARRANGEMENTS, (CONT'D.)

5.1 Special Construction, (Cont'd.)

5.1.3 Termination Liability, (Cont'd.)

(B) The amount of the maximum termination liability is equal to the estimated amounts for:

(1) Cost installed of the facilities provided including estimated costs for rearrangements of existing facilities and/or construction of new facilities as appropriate, less net salvage. Cost installed includes the cost of:

(a) equipment and materials provided or used,
(b) engineering, labor and supervision,
(c) transportation, and
(d) rights of way;

(2) license preparation, processing, and related fees;

(3) tariff preparation, processing, and related fees;

(4) cost of removal and restoration, where appropriate; and

(5) any other identifiable costs related to the specially constructed or rearranged facilities.

(C) The applicable termination liability method for calculating the unpaid balance of a term obligation is: (a) the sum of the amounts determined as set forth in Section 5.1.3(B) preceding, multiplied by (b) a factor related to the unexpired period of liability, multiplied by (c) the discount rate for return and contingencies. The amount determined in section 5.1.3(B) preceding shall be adjusted to reflect the predetermined estimate net salvage, including any reuse of the facilities provided. This product is adjusted to reflect applicable taxes.

SECTION 5 - SPECIAL ARRANGEMENTS, (CONT'D.)

5.2 Individual Case Basis (ICB) Arrangements

Arrangements will be developed on a case-by-case basis in response to a bona fide request from a Customer or prospective Customer to develop a competitive bid for a service offered under this tariff. Rates quoted in response to such competitive requests may be different than those specified for such services in this tariff. ICB rates will be offered to the Customer in writing and on a non-discriminatory basis.

If the Company and a Customer enter into an ICB arrangement, the ICB arrangement may provide the Customer or the Company with certain rights to terminate the arrangement. If the Customer or the Company exercises such a termination right, then upon the effective date of termination, the ICB rates will no longer apply. Customer may choose to transit traffic through the Company at tariff rates, subject to meeting any credit requirements of the Company in this tariff. Regardless, in an effort to preserve uninterrupted termination of traffic and to avoid unnecessary disruptions in PSTN calling, Customer will maintain the existing interconnections for the purpose of receiving traffic from the Company while the Company and Customer negotiate a termination agreement governing the interconnection. The terms of the ICB arrangement applicable to the Customer's acceptance of traffic from the Company will continue to apply until such time as a successor termination agreement becomes effective. The Customer and the Company will use their best endeavors to resolve in good faith all outstanding issues in the renegotiation of a successor agreement and will escalate any disputes to members of senior management. However, if the Customer and the Company are unable to come to a resolution of certain issues during the renegotiation process, either the Customer or the Company may at any time request arbitration, mediation or assistance from the Board or, if applicable, the Federal Communications Commission, to resolve the remaining issues, in accordance with the applicable commission's procedures.

5.3 Temporary Promotional Programs

The Company may establish temporary promotional programs wherein it may waive or reduce non-recurring or recurring charges, to introduce present or potential Customers to a service not previously received by the Customers.